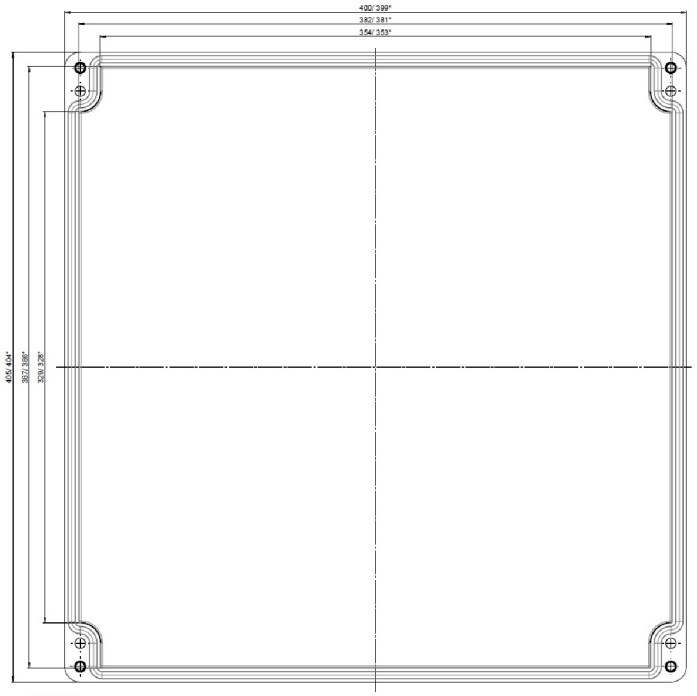

Deckel / Lid

* = Mass durch Formkonizität nach unten verringert.
Freimass - Toleranz nach DIN 16901-130
* = Dimensions reduced in the lower part by mould incline
General tolerances according to DIN 16901-130

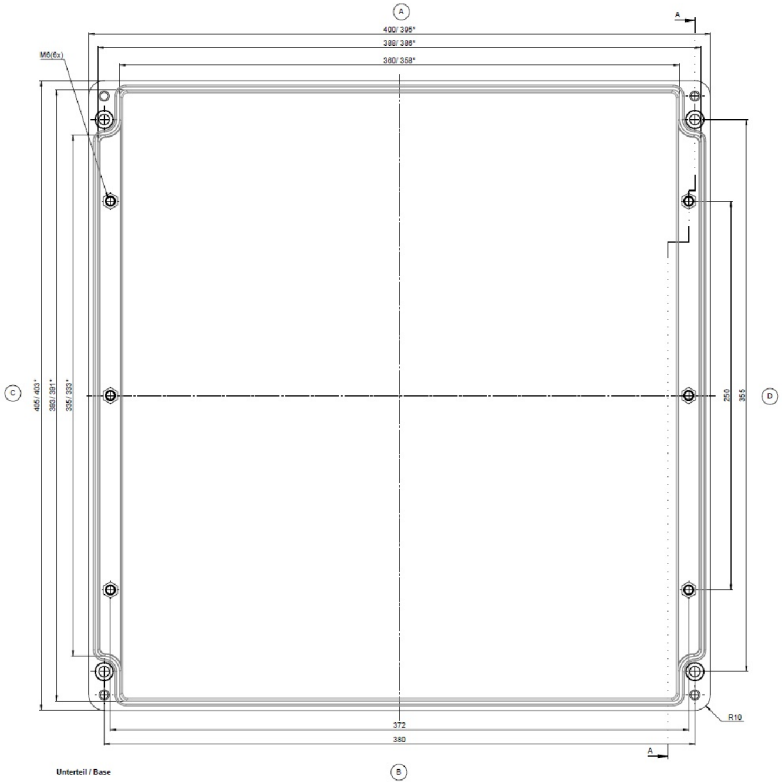

Unterteil / Base

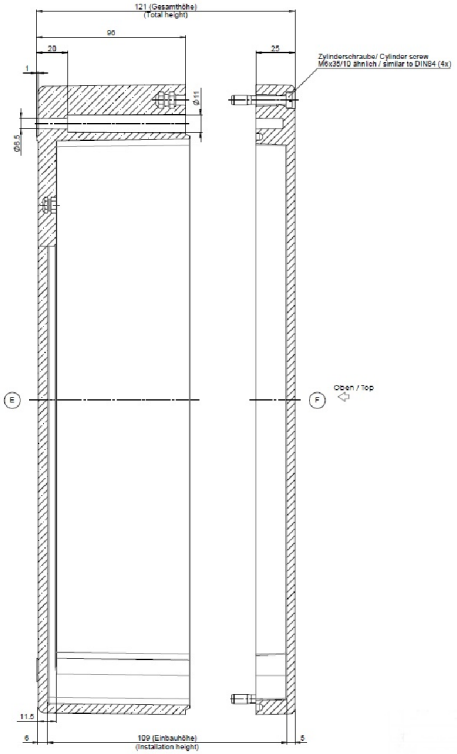

USE RANGE	TOLERANCE	SURFACE	ARCHIVE	WEIGHT 7,37kg
	ISO 2768-mK		MATERIAL: Polyester / polyester in schwarz / black	

	DATE	NAME
DRAWN	10.07.2026	M.Minkwitz
APPR.	13.07.2026	T.Michelbach
RLS.		

DESCRIPTION: Polyester Ex Leergehäuse / polyester Ex empty enclosure

QUINT Ex®

DRAWING-NUMBER: QX-P13

SHEET 1 OF 1

INDEX	DESCRIPTION	DATE	NAME	ORIGINAL	LEXCH.F.	LEXCH.TH.